MX SERIES

DATALOGIC

VISION

MX-Series Vision Processors provide the highest performance in image processing with even more flexibility through multi-camera support. Three models allow you to choose the correct level of performance based on your application needs.

The MX20 Series is an entry-level, affordable processor featuring an Intel® T3100 dual core 1.90 GHz processor and two independent PoE (Power over Ethernet) camera ports. The MX20 offers a cost-effective mean to migrate from smart-camera applications to an embedded vision system.

The MX40 Series is a ruggedized and compact embedded vision processor that features Intel® multi-core processors and four independent PoE (Power over Ethernet) camera ports. The MX40's long-life embedded components provide a very robust and reliable vision system for critical inspection applications.

The next-generation MX80 Vision Processor extends the power and performance of MX-Series to faster applications, advanced algorithms and higher-resolutions with its Intel® Core™ i7 quad-core processor, 8GB memory and four independent Gigabit PoE (Power over Ethernet) ports.



BENEFITS

- Easily integrates with Datalogic P, A and T-Series smart cameras for data sharing and intercamera communication without needing a PC
- Lower installation cost
- Combines up to four unique camera capabilities for application-specific requirements
- Simplifies cabling by eliminating the necessity for camera power cables
- Shared processing reduces cost per inspection point
- Increased inspection power delivers higher inspection rates

HIGHLIGHTS

- Multi-camera capability – Reduces integration costs on a per camera basis and allows data collection and analysis from multiple inspection points
- Supports over 100 different GigE Vision cameras including line scan, high resolution and IP rated cameras – Provides access to the largest selection of cameras
- Allows use of different camera formats and resolutions on one processor – Offers easy setup resulting in reduced integration costs
- Complete IMPACT software suite included for ultimate programming flexibility – Addresses any inspection and user interface needs
- 2 or 4 Channel Power over Ethernet (PoE) camera ports – Integrates easily. PoE compliant cameras need no power cables and support up to 100 meter cable lengths

TECHNICAL SPECIFICATIONS

	MX20	MX40	MX80
CPU	Intel® T3100 dual-core 1.90 GHz	Intel® P8400 dual-core 2.26 GHz	Intel® Core i7-2710QE 4-core 2.10 GHz
System Memory	4 GB DDR3 RAM		4 GB DDR3 RAM 8 GB DDR3 RAM (Win 7)
Storage	40 GB (Win XP) 80 GB (Win 7)		
Graphics	Intel® GM45/ICH9 video chipset (1600 x 1200 resolution), VGA		Intel® QM67 Express chipset (2048 x 1536 resolution), DVI
Camera Interface	2x 1000 Mbps Base-T, PoE camera ports (up to 7 W per channel)	4x 1000 Mbps Base-T, PoE camera ports (up to 7 W per channel)	
Camera Imager Limit	2Mpixel or lower No LineScan support	None	
Network Interface	2x 10/100/1000 Mbps Base-T LAN ports		
Serial Communications	2x RS-232 serial ports		5x RS-232 serial ports
USB	3x USB 2.0 ports		4x USB 2.0 ports 2x USB 3.0 ports
Keyboard/Mouse	Combined PS/2 type mini-DIN connectors		
Comm Connectivity	Supports Ethernet/IP, Modbus TCP and OPC		
I/O	16x isolated digital inputs 16x isolated digital outputs 2x event inputs (shared with the Polled Inputs)		
Operating System	Windows XP Pro (32-Bit OS, SP3) Windows 7 Pro Embedded		
Power Requirements	24 VDC (+/- 10%, 3.5 amp min)		
Dimensions	200 mm x 85 mm x 165 mm (7.8 in. x 3.3 in. x 6.5 in.)		230 mm x 82 mm x 206 mm (9.06 in. x 3.23 in. x 8.11 in)
Operating Temperature	0 to 55° C (+32 to +131° F)		
Humidity	0 to 90% (non-condensing)		
Certification (Safety Compliance)	CE/FCC, RoHS, UL		

DIMENSIONS

MX20

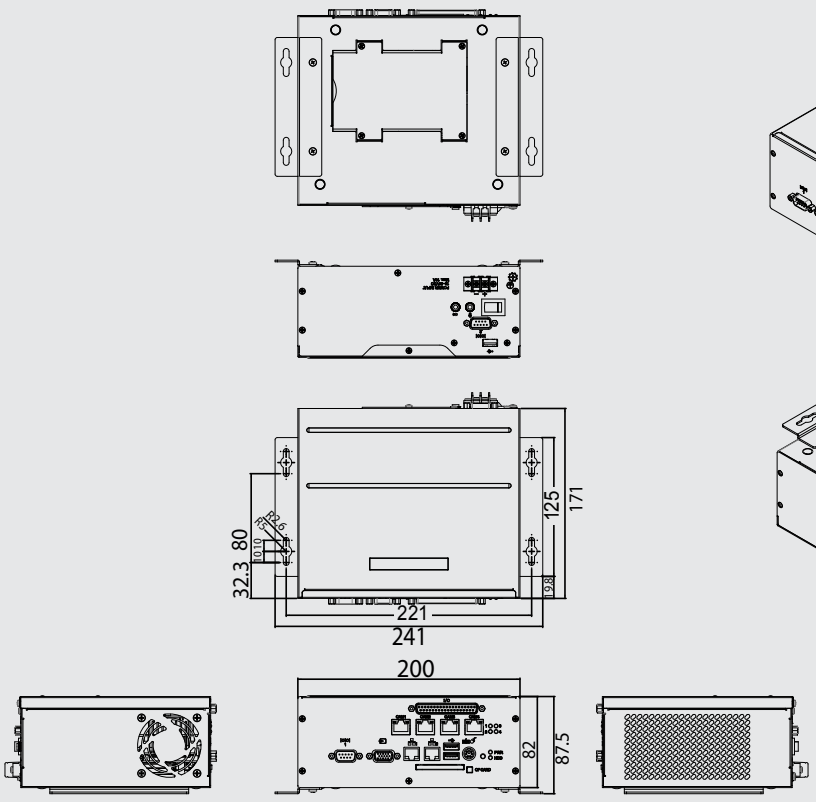

DIMENSIONS

MX40

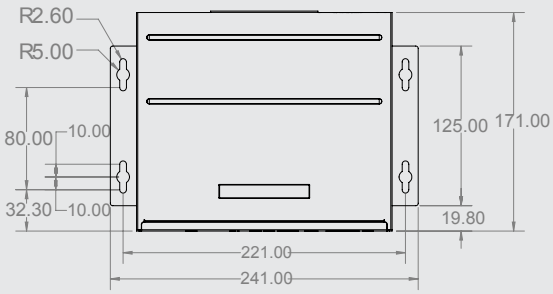

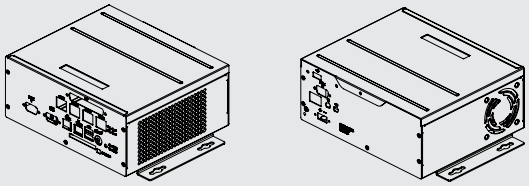

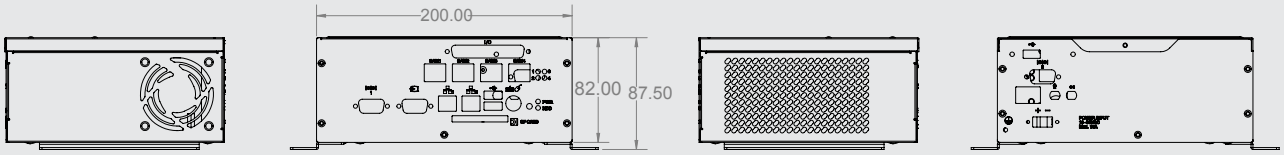

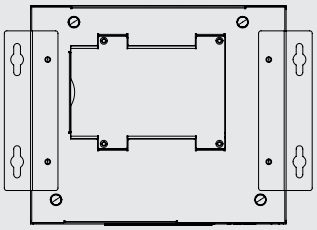

MX80

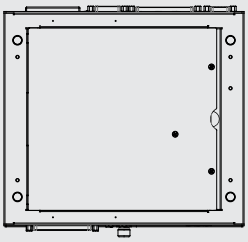

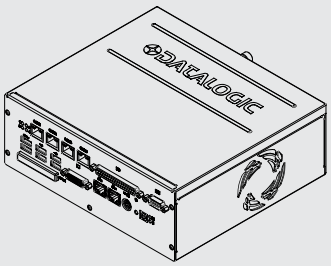

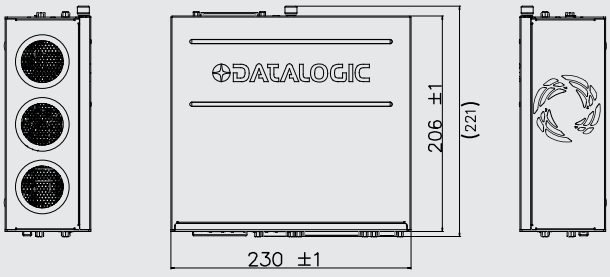



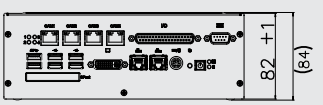

M-CAMERAS

M-Series cameras enable fast integration of challenging machine vision solutions.
The unique ability to mix and match color, gray-scale, multi imager, area and line scan cameras with an MX-Series processor lets you define, select and deploy the perfect imaging solution for high-speed, multi-camera machine vision inspections.



M100 Series



M200 Series



M300 Series



M500 Series

BENEFITS

- GigE compatible for fast integration with MX-Series processors
- Compact size fits many machine configurations
- High-speed trigger input
- High-speed strobe light output
- C-mount lens support
- IP30 rated housing
- CE, FCC and RoHS compliant
- Utilizes color inspection tools

HIGHLIGHTS

- GigE compatible for easy communication to MX Series processors
- VGA to 5MP resolution, in both gray scale and color
- Camera settings fully controllable by IMPACT Software
- Power over Ethernet (PoE) reduces cabling complexity (only M1xx)
- Small form factor (as little as 29 mm x 29 mm x 60 mm) enables mounting in space-constrained locations
- Asynchronous triggering enables each camera to independently capture images at rates up to 210 frames per second (fps)
- Trigger and strobe I/O on camera eases integration

TECHNICAL SPECIFICATIONS

AREASCAN

	GRAY-SCALE MODEL	COLOR MODEL	RESOLUTION	IMAGER	SHUTTER	FRAME RATE (FPS)	PoE
	M100	M100C	640 x 480	1/4" CCD	Global	100	▪
	M110	M110C	640 x 480	1/3" CCD	Global	90	▪
	M115	M115C	659 x 494	1/2" CCD	Global	100	▪
	M125	M125C	782 x 582	1/2" CCD	Global	75	▪
	M150	M150C	1296 x 966	1/3" CCD	Global	30	▪
	M180	M180C	1628 x 1236	1/1.8" CCD	Global	20	▪
	M190	M190C	2048 x 1088	2/3" CMOS	Global	50	▪
	M195	M195C	2048 x 2048	1" CMOS	Global	25	▪
	M197	M197C	2592 x 1944	1/2.5" CMOS	Rolling	14	▪
	M200	M200C	659 x 494	1/3" CCD	Global	70	
	M202	M202C	659 x 494	1/2" CCD	Global	79	
	M205	M205C	752 x 480	1/3" CMOS	Global	64	
	M210	M210C	782 x 582	1/2" CCD	Global	55	
	M230	M230C	1034 x 779	1/3" CCD	Global	31	
	M250	M250C	1280 x 960	1/3" CCD	Global	32	
	M270	M270C	1392 x 1040	2/3" CCD	Global	30	
	M290	M290C	1628 x 1236	1/1.8" CCD	Global	14	
	M295	M295C	1628 x 1236	1/1.8" CCD	Global	28	
	M300	M300C	648 x 488	1/3" CCD	Global	210	
	M330	M330C	1004 x 1004	2/3" CCD	Global	60	
	M350	M350C	1608 x 1208	1" CCD	Global	35	
	M390	M390C	2448 x 2050	2/3" CCD	Global	17	

LINESCAN

	MODEL	RESOLUTION	MAX LINE RATE	PIXEL SIZE	PoE	C-MOUNT	F-MOUNT
	M565	2048	48 KHz	7x7 µm		▪	▪
	M570	4096	24 KHz	7x7 µm			▪

DIMENSIONS

M100 Series

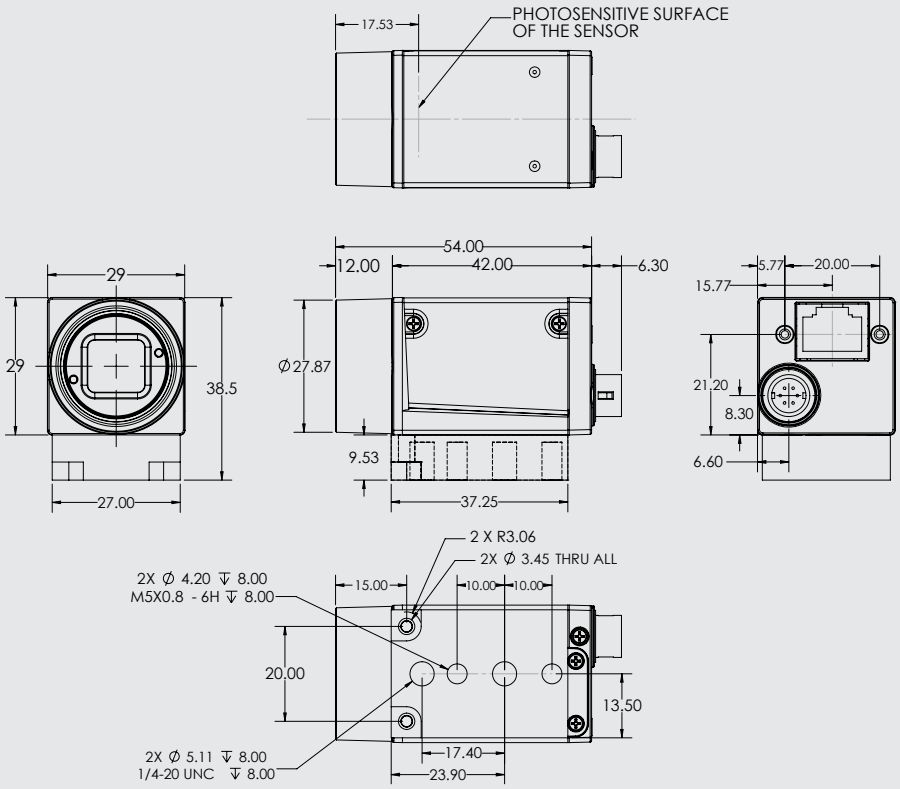

M200 Series

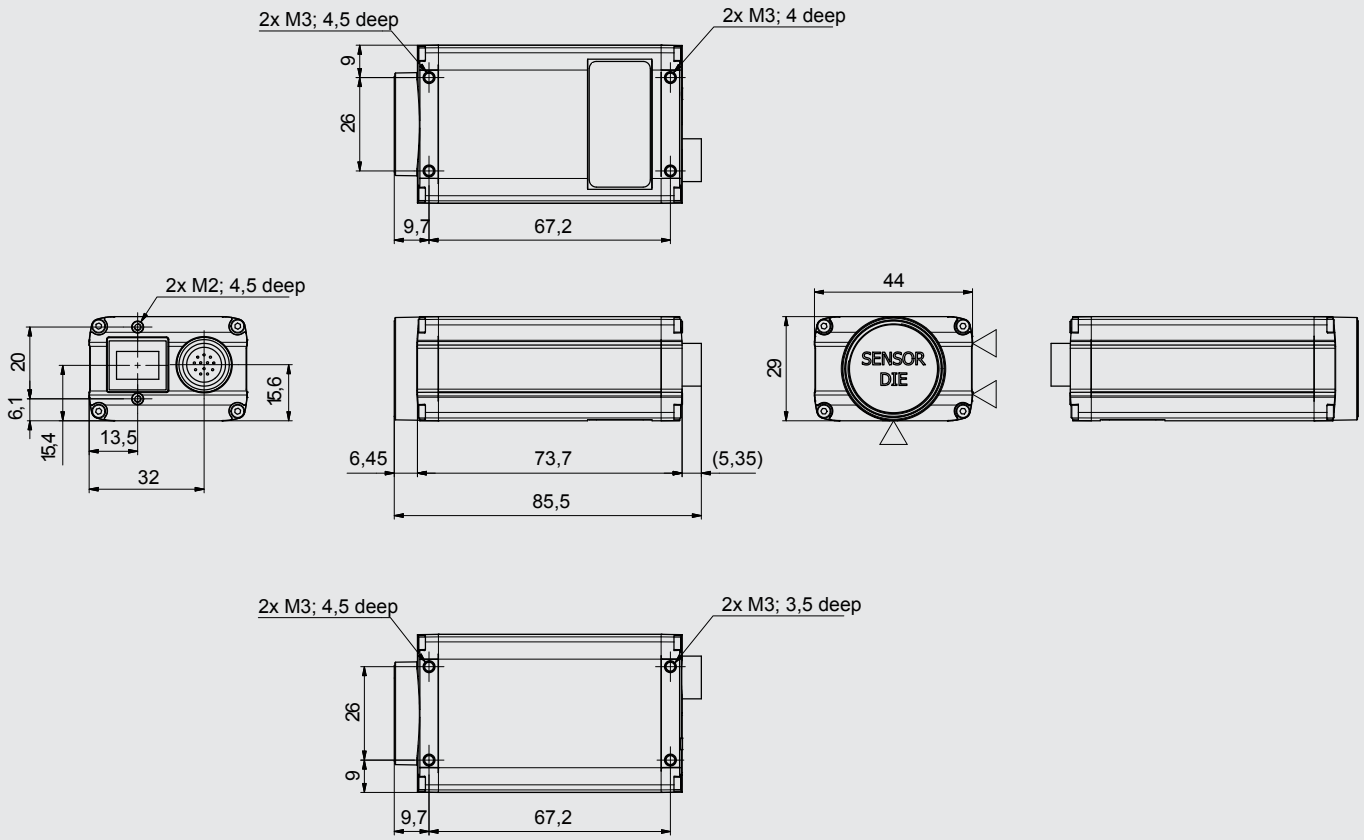

DIMENSIONS

M300 Series

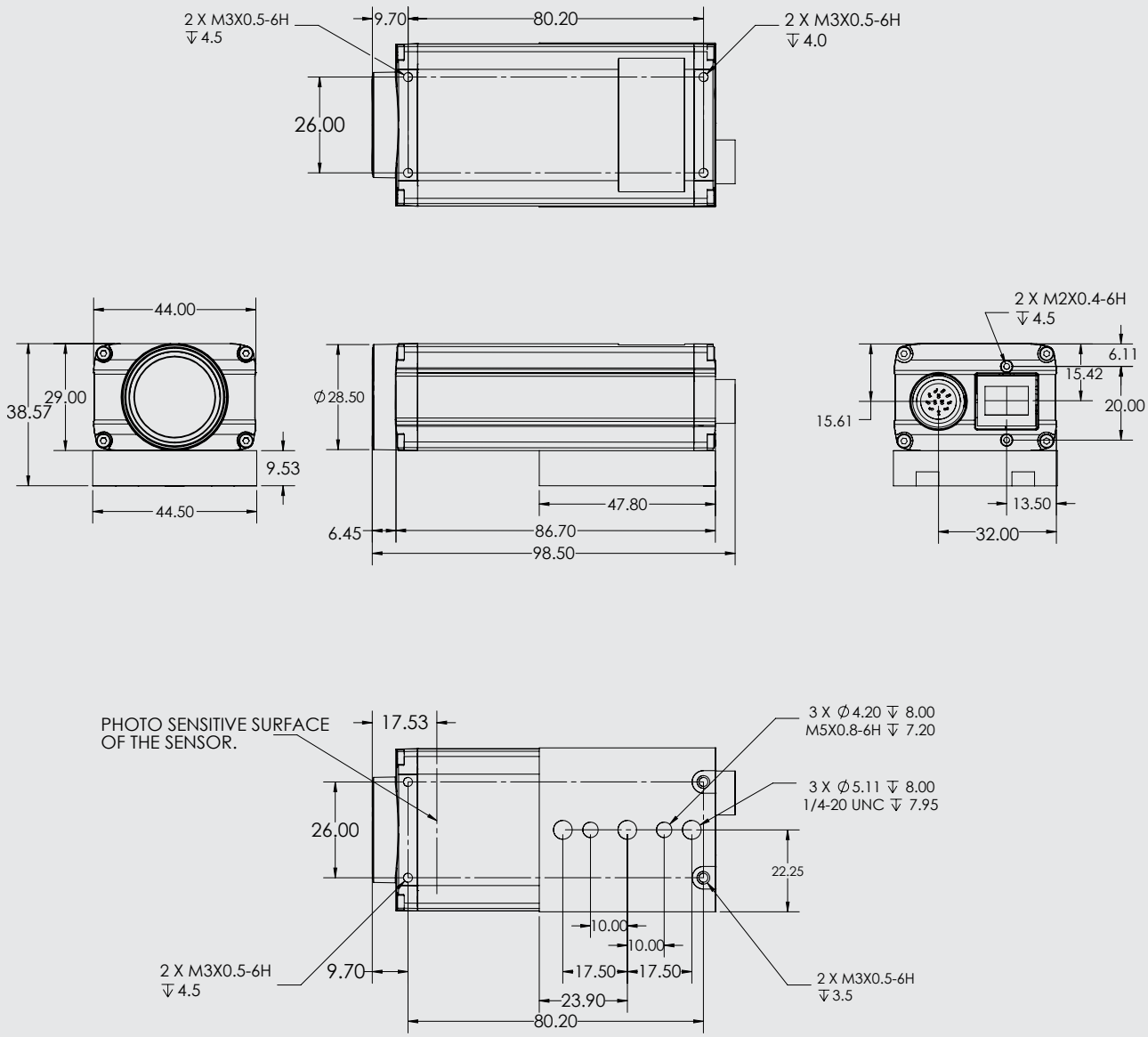

DIMENSIONS

M500 Series

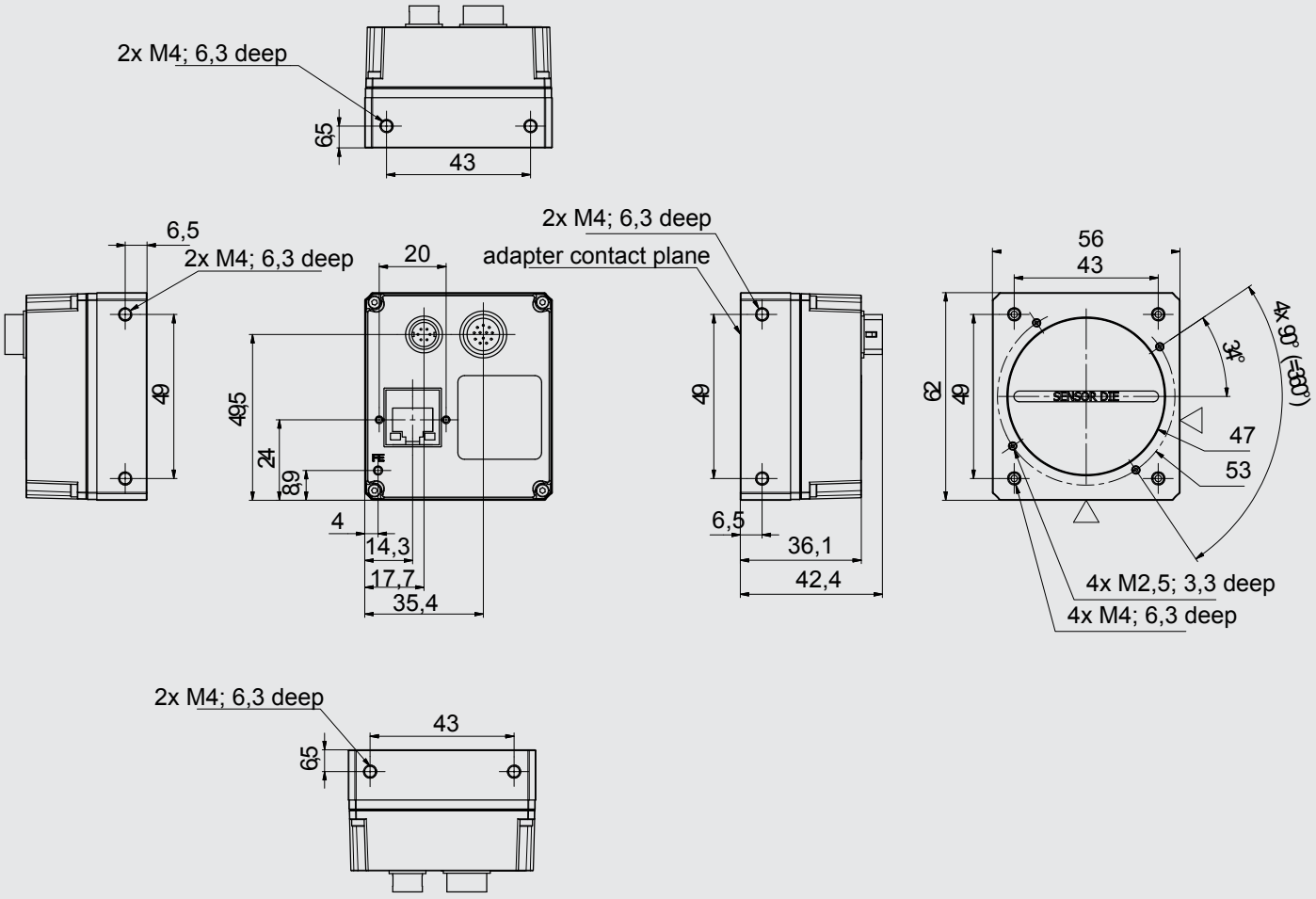

MODELS

DESCRIPTION	ORDER N°
Vision processors	
MX20 Vision Processor, Windows 7, 4 GB RAM, 2 Camera Licensed	959912001
MX40 Vision Processor, Windows 7, 4 GB RAM,1 Camera Licensed	959914001
MX40 Vision Processor, Windows 7, 4 GB RAM, 2 Camera Licensed	959914002
MX40 Vision Processor, Windows 7, 4 GB RAM, 3 Camera Licensed	959914003
MX40 Vision Processor, Windows 7, 4 GB RAM, 4 Camera Licensed	959914004
MX80 Vision Processor, Windows 7, 8 GB RAM, 1 Camera Licensed	959918001
MX80 Vision Processor, Windows 7, 8 GB RAM, 2 Camera Licensed	959918002
MX80 Vision Processor, Windows 7, 8 GB RAM, 3 Camera Licensed	959918003
MX80 Vision Processor, Windows 7, 8 GB RAM, 4 Camera Licensed	959918004
Cameras	
Camera, M100, Gig-E, 659 x 494, 100 FPS, Grayscale, 1/4" CCD	601-0351
Camera, M100C, Gig-E, 659 x 494, 100 FPS, Color, 1/4" CCD	601-0378
Camera, M110, Gig-E, 659 x 494, 90 FPS, Grayscale, 1/3" CCD	601-0423
Camera, M110C, Gig-E, 659 x 494, 90 FPS, Color, 1/3" CCD	601-0424
Camera, M115, Gig-E, 659 x 494, 100 FPS, Grayscale, 1/2" CCD	601-0450
Camera, M115C, Gig-E,659 x 494, 100 FPS, Color, 1/2" CCD	601-0451
Camera, M125, Gig-E, 782 x 582, 75 FPS, Grayscale, 1/2" CCD	601-0452
Camera, M125C, Gig-E, 782 x 582, 75 FPS, Color, 1/2" CCD	601-0453
Camera, M150, Gig-E, 1296 x 966, 30 FPS, Grayscale, 1/3" CCD	601-0352
Camera, M150C, Gig-E, 1296 x 966, 30 FPS, Color, 1/3" CCD	601-0379
Camera, M180, Gig-E, 1628 x 1236, 20 FPS, Grayscale, 1/1.8" CCD	601-0357
Camera, M180C, Gig-E, 1628 x 1236, 20 FPS, Color, 1/1.8" CCD	601-0384
Camera, M190, Gig-E, 2048 x 1088, 50 FPS, Grayscale, 2/3" CMOS	601-0454
Camera, M190C, Gig-E, 2048 x 1088, 50 FPS, Color, 2/3" CMOS	601-0455
Camera, M195, Gig-E, 2048 x 2048, 25 FPS, Grayscale, 1" CMOS	601-0456
Camera, M195C, Gig-E, 2048 x 2048, 25 FPS, Color, 1" CMOS	601-0457
Camera, M197, Gig-E, 2592 x 1944, 14 FPS, Grayscale, 1/2.5" CMOS	959931010
Camera, M197C, Gig-E, 2592x1944, 14 FPS, Color, 1/2.5" CMOS	959931011
Camera, M200, Gig-E, 659 x 494, 70 FPS, Grayscale, 1/3" CCD	601-0358
Camera, M200C, Gig-E, 659 x 494, 70 FPS, Color, 1/3" CCD	601-0385
Camera, M202, Gig-E, 659 x 494, 79 FPS, Grayscale, 1/2" CCD	601-0359
Camera, M202C, Gig-E, 659 x 494, 79 FPS, Color, 1/2" CCD	601-0386
Camera, M205, Gig-E, 752 x 480, 64 FPS, Grayscale, 1/3" CMOS	601-0426
Camera, M205C, Gig-E, 752 x 480, 64 FPS, Color, 1/3" CMOS	601-0427
Camera, M210, Gig-E, 782 x 582, 55 FPS, Grayscale, 1/2" CCD	601-0360
Camera, M210C, Gig-E, 782 x 582, 55 FPS, Color, 1/2" CCD	601-0387
Camera, M230, Gig-E, 1034 x 779, 31 FPS, Grayscale, 1/3" CCD	601-0361
Camera, M230C, Gig-E, 1034 x 779, 31 FPS, Color, 1/3" CCD	601-0388
Camera, M250, Gig-E, 1296 x 966, 32 FPS, Grayscale, 1/3" CCD	601-0362
Camera, M250C, Gig-E, 1296 x 966, 32 FPS, Color, 1/3" CCD	601-0389
Camera, M270, Gig-E, 1392 x 1040, 30 FPS, Grayscale, 2/3" CCD	601-0363
Camera, M270C, Gig-E, 1392 x 1040, 30 FPS, Color, 2/3" CCD	601-0390
Camera, M290, Gig-E, 1628 x 1236, 14 FPS, Grayscale, 1/1.8" CCD	601-0353
Camera, M290C, Gig-E, 1628 x 1236, 14 FPS, Color, 1/1.8" CCD	601-0380
Camera, M295, Gig-E, 1628 x 1236, 28 FPS, Grayscale, 1/1.8" CCD	601-0420
Camera, M295C, Gig-E, 1628 x 1236, 28 FPS, Color, 1/1.8" CCD	601-0421
Camera, M300, Gig-E, 648 x 488, 210 FPS, Grayscale, 1/3" CCD	601-0354
Camera, M300C, Gig-E, 648 x 488, 210 FPS, Color, 1/3" CCD	601-0381
Camera, M330, Gig-E, 1004 x 1004, 60 FPS, Grayscale, 2/3" CCD	601-0364
Camera, M330C, Gig-E, 1004 x 1004, 60 FPS, Color, 2/3" CCD	601-0391
Camera, M350, Gig-E, 1608 x 1208, 35 FPS, Grayscale, 1" CCD	601-0365
Camera, M350C, Gig-E, 1608 x 1208, 35 FPS, Color, 1" CCD	601-0392
Camera, M390, Gig-E, 2448 x 2050 (5MP), 17 FPS, Grayscale, 2/3" CCD	601-0355
Camera, M390C, Gig-E, 2448 x 2050 (5MP), 17 FPS, Color, 2/3" CCD	601-0382
Camera, M565, Gig-E, 2048 Linescan, 51KHz, Grayscale	959931002
Camera, M570, Gig-E, 4096 Linescan, 26KHz, Grayscale	959931003

ACCESSORIES

DESCRIPTION	ORDER N°
I/O Cables, MX Series Processors	
Cable, I/O, MX Series, Processor to Terminal Block, .75 Meter	606-0675-.75
Cable, I/O, MX Series, Processor to Terminal Block, 1.5 Meter	606-0675-1.5
Cable, I/O, MX Series, Processor to Terminal Block, 3 Meter	606-0675-3
Cable, I/O, MX Series, Processor to Terminal Block, 4.5 Meter	606-0675-4.5
Cable, I/O, MX Series, Processor to Terminal Block, 7.5 Meter	606-0675-7.5
Cable, I/O, MX Series, Processor to Terminal Block, 15 Meter	95A906060
I/O Boards, MX Series Processors	
I/O Board, MX-Series Processors, Female DB37, DIN Rail Mountable, no isolation	248-0110
I/O Board, MX-Series External I/O terminal Block, DIN Rail Mountable, with isolation	661-0403
Power and I/O Cables to Terminal Block, M Series Cameras	
Cable, Camera I/O, M1xx, M5xx, 6 pin, 2 Meter, Camera to Terminal Block	606-0674-02
Cable, Camera I/O, M1xx, M5xx, 6 pin, 3 Meter, Camera to Terminal Block	606-0674-03
Cable, Camera I/O, M1xx, M5xx, 6 pin, 5 Meter, Camera to Terminal Block	606-0674-05
Cable, Camera I/O, M1xx, M5xx, 6 pin, 10 Meter, Camera to Terminal Block	606-0674-10
Cable, Camera I/O, M1xx, M5xx, 6 pin, 15 Meter, Camera to Terminal Block	606-0674-15
Cable, Camera I/O, M1xx, M5xx, 6 pin, 20 Meter, Camera to Terminal Block	606-0674-20
Cable, Camera Power and I/O, M2xx, M3xx and M5xx, 12 pin, 2 Meter, Camera to Terminal Block	606-0673-02
Cable, Camera Power and I/O, M2xx, M3xx and M5xx, 12 pin, 3 Meter, Camera to Terminal Block	606-0673-03
Cable, Camera Power and I/O, M2xx, M3xx and M5xx, 12 pin, 5 Meter, Camera to Terminal Block	606-0673-05
Cable, Camera Power and I/O, M2xx, M3xx and M5xx, 12 pin, 10 Meter, Camera to Terminal Block	606-0673-10
Cable, Camera Power and I/O, M2xx, M3xx and M5xx, 12 pin, 15 Meter, Camera to Terminal Block	606-0673-15
Power and I/O Cables Unterminated, M Series Cameras	
M1xx Camera I/O Cable, 6 pin, 2 Meter, pigtail	606-0672-02
M1xx Camera I/O Cable, 6 pin, 3 Meter, pigtail	606-0672-03
M1xx Camera I/O Cable, 6 pin, 5 Meter, pigtail	606-0672-05
M1xx Camera I/O Cable, 6 pin, 10 Meter, pigtail	606-0672-10
M2xx and M3xx Camera Power and I/O Cable, 12 pin, 2 Meter, pigtail	606-0671-02
M2xx and M3xx Camera Power and I/O Cable, 12 pin, 3 Meter, pigtail	606-0671-03
M2xx and M3xx Camera Power and I/O Cable, 12 pin, 5 Meter, pigtail	606-0671-05
M2xx and M3xx Camera Power and I/O Cable, 12 pin, 10 Meter, pigtail	606-0671-10
M2xx and M3xx Camera Power and I/O Cable, 12 pin, 15 Meter, pigtail	606-0671-15
I/O Boards, M Series Cameras	
I/O Board, M1xx Camera, 1 Input / 1 Output, Female DB9, DIN Rail Mountable, no isolation	248-0140
I/O Board, M1xx Camera, w / isolation	661-0399
I/O Board, M2xx and M3xx Cameras, Female HD15, DIN Rail Mountable, no isolation	248-0141
I/O Board, M2xx, M3xx, & Aviator Camera, w / isolation	661-0400
I/O Board, M5xx Camera, w / isolation	661-0401
Brackets, M Series Cameras	
Camera Mount, M1xx Cameras	95A903029
Camera Mount, M2xx and M3xx Cameras	381-1354
Ethernet Cables, M Series Cameras	
Cable, Gig-E, CAT6, 2 Meter	606-0677-02
Cable, Gig-E, CAT6, 3 Meter	606-0677-03
Cable, Gig-E, CAT6, 5 Meter	606-0677-05
Cable, Gig-E, CAT6, 7 Meter	606-0677-07
Cable, Gig-E, CAT6, 10 Meter	606-0677-10
Cable, Gig-E, CAT6, 15 Meter	606-0677-15
Cable, Gig-E, CAT6, 25 Meter	606-0677-25
Cable, Gig-E, CAT6, 50 Meter	606-0677-50
Licenses, MX Series Processors	
License, Pattern Sorting Tool, Processor	95A906545
License, OCR, 1 Camera Processor	95A906541
License, OCR, 2 Camera Processor	95A906542
License, OCR, 3 Camera Processor	95A906543
License, OCR, 4 Camera Processor	95A906544
License, Add 1 Camera, MX-Series	95A906536
License, Add 2 Cameras, MX-Series	95A906537
License, Add 3 Cameras, MX-Series	95A906538
License, 3rd Party Cameras, Processor	95A906539

Rev. 00, 03/2015

The company endeavours to continuously improve and renew its products; for this reason the technical data and contents of this catalogue may undergo variations without prior notice. For correct installation and use, the company can guarantee only the data indicated in the instruction manual supplied with the products. Product and Company names and logos referenced may be either trademarks or registered trademarks of their respective companies. We reserve the right to make modifications and improvements.