MDI 58 F / G - 63 F / G series

Hollow shaft encoder series for industrial applications with high mechanical resistance requirements.

features

- 3 channel encoder (A / B / Z) up to 2500 ppr
- Power supply up to +30 VDC with several electronic outputs available
- Up to 220 kHz output frequency
- Cable or connector output
- Blind hollow shaft diameter up to 15 mm
- Mounting by stator coupling, spring or anti-rotation pin

web contents

- Application notes
- Photos
- Catalogue / Manuals

code description

MDI 58G 1000 Z 5/30 P 10 X X M R

series	MDI	incremental encoder series MDI
model	58F	blind hollow shaft with stator coupling
	58G	blind hollow shaft with anti-rotation pin
	63F	blind hollow shaft with spring
	63G	blind hollow shaft with anti-rotation pin
resolution	1000	ppr 100 ... 2500 mm
zero pulse	S	without zero pulse
	Z	with zero pulse
power supply	5/30	5...30 Vdc
electronic interference	P	push-pull
	L	line driver
bore diameter	10	10 mm
	15	15 mm
enlcosure rating	X	IP54
	S	IP66
option	X	to be reported
output type	P	cable (standard length 1.5 m)*
	M	MIL connector
	M12	M12 connector
direction type	A	axial
	R	radial

* Longer cable available on demand

technical specification

	MDI 58 F / G - 63 F / G
bore diameter	ø 10 / 15 mm
IP mechanical protection	X = IP 54 (IEC 60529) S = IP 66 (IEC 60529)
max rotation speed	3000 rpm
max shaft load	200 N
shock resistance	50 G, 11 ms up to 2500 ppr (IEC 60068-2-27)
vibration resistance	10 G, 10 ... 2000 Hz (IEC 60068-2-6)
moment of inertia	4 x 10^{-6} kgm^2
starting torque (at +20°c / +68°f)	< 0,02 Nm (IP 54) < 0,06 Nm (IP 66)
Fixing torque for collar clamping	1 Nm max
body material	EN-AW 2011 aluminum
shaft material	1.4305 / AISI 303 stainless steel
housing material	PA66 glass fiber reinforced
bearings	2 ball bearings
bearings life	10^9 revolutions
operating temperature	-20° ... +70°C (-4° ... +158°F)
storage temperature	-25° ... +70°C (-13° ... +158°F)
weight	350 g (12,35 oz)
resolution	from 100 to 2500 ppr
power supply	5/30 = 4,5 ... 30 V DC (reverse polarity protection)
No-Load supply current	800 mW
max load current	20 mA / channel
output type*	push-pull / line driver
max output frequency	220 kHz
counting direction	A leads B clockwise (shaft view)
EMC	IEC 61000-6-2 IEC 61000-6-4

* output levels according to power supply

resolutions

MDI 58 F / G - 63 F / G
100* - 120 - 128 - 200 - 240 - 256 - 360* - 400 - 480 - 500* - 512* - 625 - 720* - 750 - 900 - 1000* - 1024* - 1250 - 1440 – 1500 - 1800 - 2000* - 2048* - 2500*

* preferred resolutions

connections

function	Cable output Push pull	Cable output Line driver	7 pin M output Push pull	7 pin M output Line Driver no Zero	10 pin M output Line Driver with Zero	5 pin M12 output Push pull	8 pin M12 output Line Driver
+V DC	red	red	F	D	D - E	2	7
0 V	black	black	A	F	F	4	1
Ch. A	green	green	C	A	A	3	6
Ch. A-	/	brown	/	C	G	/	5
Ch. B	yellow	yellow	E	B	B	1	4
Ch. B-	/	orange	/	E	H	/	3
Ch. Z	blue	blue	D	/	C	5	2
Ch. Z-	/	white	/	/	I	/	8
⏚	shield	shield	G	G	J	housing	housing

M connector (7 pin)
Amphenol MS3102-E-16-S
solder side view FV

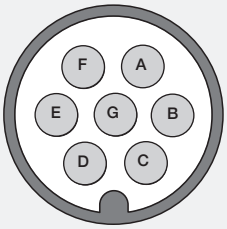

M connector (10 pin)
Amphenol MS3102-E-18-1
solder side view FV

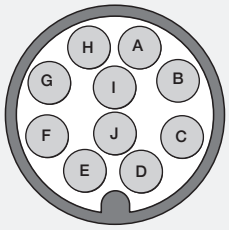

M12 connector (5 pin)
M12 A coded
solder side view FV

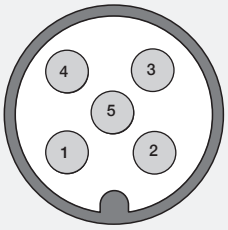

M12 connector (8 pin)
M12 A coded
solder side view FV

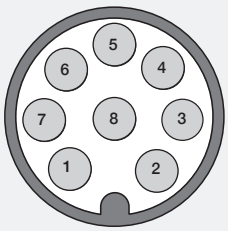

dimensions (mm)

MDI 58 F/G

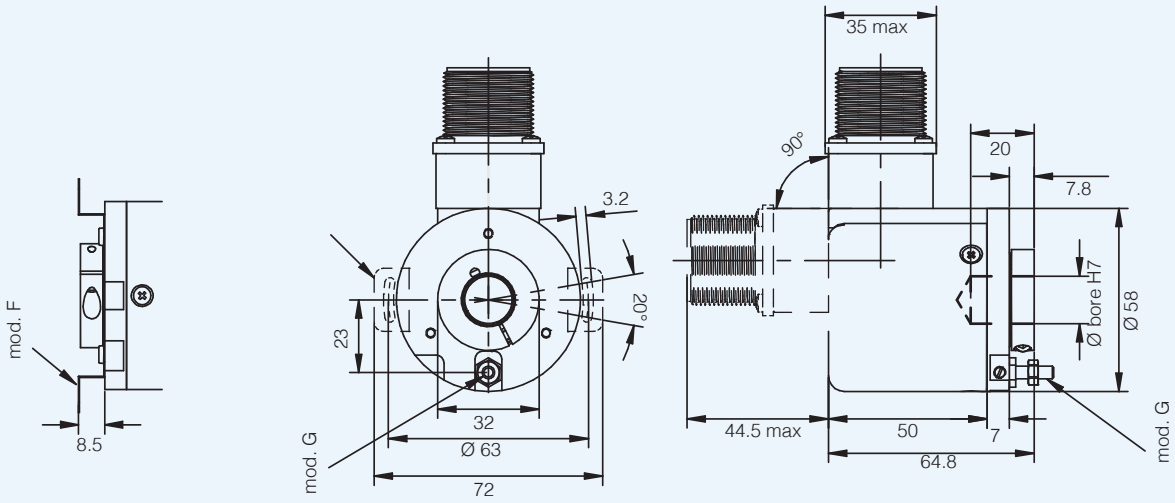

MDI 63 F/G

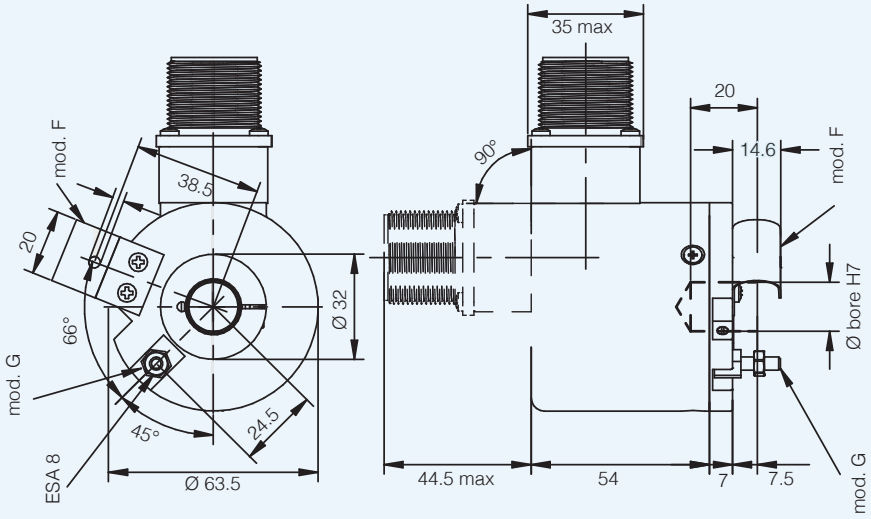

anti-rotation pin is included in model G, for mounting instruction please refer to product installation notes